# Fuji USER MANUAL

## STRAIGHT GRINDERS

### MODELS : FG-3H-6, -9

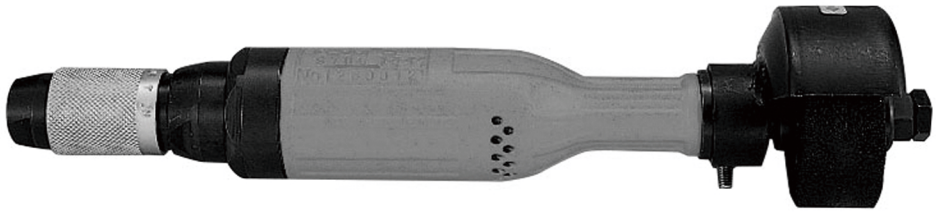

FG-3H-6,-9

**SPECIFICATIONS**

| Model | Max.Dia (Grinding Wheel) | Rotational Frequency | Spindle Thread Size | Overall Length | Mass | Max. Air Consumption | Air Inlet Thread Size | Air Hose Size |
|---|---|---|---|---|---|---|---|---|
| | mm | $min^{-1}$ | | mm | kg | $m^3$/min | | mm |
| FG-3H-6 | 65 × 25 × 9.53 | 9,700 | W3/8-16 | 329 | 1.5 | 0.55 | Rc 3/8 | 9.5 |
| FG-3H-9 | 65 × 13 × 9.53 | 9,700 | W3/8-16 | 317 | 1.5 | 0.55 | Rc 3/8 | 9.5 |

The performance figures are at 0.63 MPa(6.3bar).

⚠ **Refer to "The Instructions and Warning for Safety Use" enclosed in each tool box.**


Fuji Industrial Technique Co.,Ltd.

2-1-14, Kamiji, Higashinari-ku, Osaka, 537-0003 Japan

Tel : 81-6-6972-2335
Fax : 81-6-6972-2380


Specifications are subjects to change without notice.

# MODELS : FG-3H-6, -9

## EXPLODED VIEW

Right tightening
Left tightening

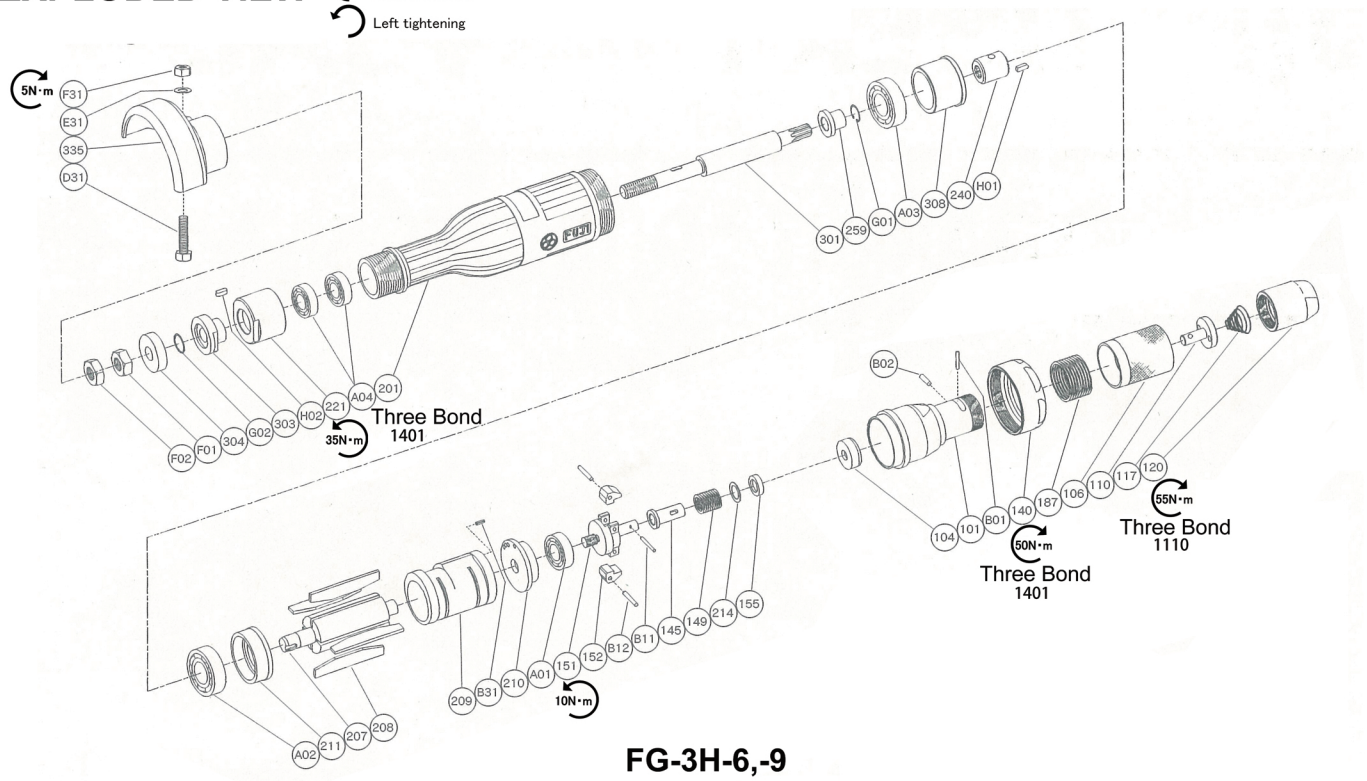


FG-3H-6,-9

## PARTS LIST

| Index No. | Parts No. | Parts Name | Qty |
|---|---|---|---|
| | | FG-3H-6 | |
| — | G-101001-00 | Housing Cover Ass'y 〈Rc〉 | |
| 101 | G-101001-50 | Housing Cover | 1 |
| (104) | G-101104-00 | Bushing | 1 |
| 106 | G-042106-04 | Throttle Valve Handle | 1 |
| 110 | G-042110-00 | Throttle Valve | 1 |
| 117 | G-042117-00 | Throttle Valve Spring | 1 |
| 120 | G-042120-00 | Throttle Valve Cover 〈Rc〉 | 1 |
| 187 | G-042187-00 | Throttle Valve Handle Spring | 1 |
| B01 | NR-316.8 | Needle Roller | 1 |
| B02 | NR-39.8 | Needle Roller | 1 |
| — | A-107010-00 | Governor Weight Ass'y | |
| 151 | A-107151-01 | Governor Cage | 1 |
| 152 | A-010152-00 | Governor Weight | 2 |
| B12 | GP-2.516GCH | Grooved Pin | 2 |
| 140 | G-101140-00 | Cup Nut | 1 |
| 145 | A-065145-00 | Governor Valve | 1 |
| 149 | A-086149-00 | Governor Valve Spring | 1 |
| 155 | A-065155-00 | Governor Valve Spring Holder | 1 |
| 201 | G-161201-00 | Housing | 1 |
| 207 | A-107207-00 | Rotor | 1 |
| 208 | G-103208-00 | Rotor Blade | 4 |
| 209 | G-161209-00 | Cylinder | 1 |
| (B31) | SP-26 | Spring Pin | 1 |
| 210 | A-107210-00 | Cylinder Upper Plate | 1 |
| 211 | A-107211-00 | Cylinder Lower Plate | 1 |
| 214 | A-065214-00 | Adjusting Washer (T=0.2) | 1 |
| 221 | G-161221-00 | Spindle Bearing Cover | 1 |
| 240 | G-161240-00 | Coupling | 1 |
| 259 | G-161259-00 | Inner Race | 1 |
| 301 | G-161301-02 | Wheel Spindle | 1 |
| 303 | G-161303-03 | Wheel Flange (A) | 1 |

| Index No. | Parts No. | Parts Name | Qty |
|---|---|---|---|
| 304 | G-161304-05 | Wheel Flange (B) | 1 |
| 308 | G-161308-00 | Spacer | 1 |
| 335 | G-161335-02 | Wheel Guard | 1 |
| (D31) | HS-625 | Hexagon Bolt | 1 |
| (E31) | SW-6 | Spring Washer | 1 |
| (F31) | N-6 | Nut | 1 |
| A01 | BB-609MN | Ball Bearing | 1 |
| A02 | BB-6200 | Ball Bearing | 1 |
| A03 | BB-6201 | Ball Bearing | 1 |
| A04 | BB-EE3 | Ball Bearing | 2 |
| B11 | NR-211.8 | Needle Roller | 1 |
| F01 | N-W3/8 | Nut | 1 |
| F02 | N-W3/8(3) | Nut | 1 |
| G01 | SR-S9 | Snap Ring | 1 |
| G02 | SR-SA10 | Snap Ring | 1 |
| H01 | K-338F | Key | 1 |
| H02 | K-338 | Key | 1 |
| | | FG-3H-9<br>It is common with FG-3H-6 excluding the parts below. | |
| 214 | A-065214-00 | Adjusting Washer (T=0.2) | ( 1 ) |
| | A-065214-01 | Adjusting Washer (T=0.3) | ( 1 ) |
| | A-065214-02 | Adjusting Washer (T=0.5) | ( 1 ) |
| 301 | G-161301-00 | Wheel Spindle | 1 |
| 335 | G-161335-00 | Wheel Guard | 1 |
| (D31) | HS-625 | Hexagon Bolt | 1 |
| (E31) | SW-6 | Spring Washer | 1 |
| (F31) | N-6 | Nut | 1 |

☐ The related parts are shown in a thick frame.
☐ #101, 209 and #335 are supplied together with parts shown in ( ).
☐ Specify parts number and quantity when ordering.

■Standard Accessory

| AC No. | Description | Qty |
|---|---|---|
| F-117 | 21mm Open-End Wrench | 1 |